SECTION RSU
REAR SUSPENSION

CONTENTS

PRECAUTIONS **2**
Caution 2
PREPARATION **3**
Special Service Tools [SST] 3
Commercial Service Tools 3
NOISE, VIBRATION AND HARSHNESS (NVH) TROUBLESHOOTING **4**
NVH Troubleshooting Chart 4
REAR SUSPENSION ASSEMBLY **5**
On-Vehicle Inspection and Service 5
STRUT INSPECTION 5
Wheel Alignment Inspection 5
DESCRIPTION 5
PREMINARY CHECK 5
CAMBER INSPECTION 5
TOE-IN 5
Component 7
Removal and Installation 8
REMOVAL 8
INSTALLATION 9
COIL SPRING AND STRUT **10**
Removal and Installation 10
REMOVAL 10
INSTALLATION 10
Disassembly and Assembly 11
DISASSEMBLY 11
INSPECTION AFTER DISASSEMBLY 11
ASSEMBLY 12
FRONT PARALLEL LINK **13**
Removal and Installation 13
REMOVAL 13
INSPECTION AFTER REMOVAL 13
INSTALLATION 13
REAR PARALLEL LINK **14**
Removal and Installation 14
REMOVAL 14
INSPECTION AFTER REMOVAL 14
INSTALLATION 14
RADIUS ROD **15**
Removal and Installation 15
REMOVAL 15
INSPECTION AFTER REMOVAL 15
INSTALLATION 15
STABILIZER BAR **16**
Removal and Installation 16
REMOVAL 16
INSPECTION AFTER REMOVAL 16
INSTALLATION 16
REAR SUSPENSION MEMBER **17**
Removal and Installation 17
REMOVAL 17
INSPECTION AFTER REMOVAL 17
INSTALLATION 17
SERVICE DATA AND SPECIFICATIONS (SDS) **18**
Wheel Alignment (Unladen) 18
Wheelarch Height (Unladen*) 18

PRECAUTIONS

PFP:00001

Caution

AES000XA

- When installing rubber bushings, final tightening must be performed under unladen conditions with tires on ground. Oil will shorten the life of rubber bushings. Be sure to wipe off any spilled oil.
  - Unladen conditions mean that fuel, engine coolant and lubricant are full. A spare tire, a jack, hand tools and mats are in designated positions.
- After servicing suspension parts, be sure to check wheel alignment.
- Self-lock nuts are not reusable. Always use new ones when installing. Since new self-lock nuts are pre-oiled, tighten as they are.

PREPARATION

PFP:00002

Special Service Tools [SST]

AES000XB

Tool number (Kent-Moore No.) Tool name		Description
ST35652000 (–) Strut attachment	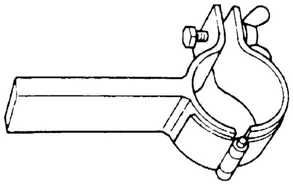 ZZA0807D	Disassembling and assembling strut

Commercial Service Tools

AES000XC

Tool name		Description
Power tool	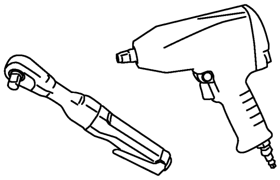 PBIC0190E	● Removing wheel nuts ● Removing torque member fixing bolts ● Removing stabilizer component parts. ● Removing strut assembly lower side
Spring compressor	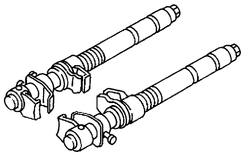 S-NT717	Removing coil spring

NOISE, VIBRATION AND HARSHNESS (NVH) TROUBLESHOOTING

PFP:00003

NVH Troubleshooting Chart

AES000XD

Use chart below to help you find the cause of the symptom. If necessary, repair or replace these parts.

Reference page			RSU-7	RSU-11	—	—	—	RSU-7	RSU-5	RSU-16	NVH in PR section	NVH in RFD section	NVH in RAX and RSU sections	NVH in WT section	NVH in WT section	NVH in RAX section	NVH in BR section	NVH in PS section
Possible cause and Suspected parts			Improper installation, looseness	Strut deformation, damage or deflection	Bushing or mounting deterioration	Parts interference	Spring fatigue	Suspension looseness	Incorrect wheel alignment	Stabilizer bar fatigue	PROPELLER SHAFT	DIFFERENTIAL	REAR AXLE AND REAR SUSPENSION	TIRES	ROAD WHEELS	DRIVE SHAFT	BRAKES	STEERING
Symptom	Rear suspension	Noise	×	×	×	×	×	×			×	×	×	×	×	×	×	×
		Shake	×	×	×	×		×			×		×	×	×	×	×	×
		Vibration	×	×	×	×	×				×		×	×		×		×
		Shimmy	×	×	×	×			×				×	×	×		×	×
		Judder	×	×	×								×	×	×		×	×
		Poor quality ride or handling	×	×	×	×	×		×	×			×	×	×			

×: Applicable

REAR SUSPENSION ASSEMBLY

PFP:55020

On-Vehicle Inspection and Service

AES000XE

Make sure that the mounting conditions (looseness, back lash) of each of the components and the component conditions (wear, damage) are normal.

STRUT INSPECTION

Check for oil leakage, damage, and breakage of installation positions.

Wheel Alignment Inspection

AES000XF

DESCRIPTION

Measure wheel alignment under unladen conditions.

NOTE:

"Unladen conditions" mean that fuel, engine coolant, and lubricant are full. A spare tire, a jack, hand tools and mats are in designated positions.

PREMINARY CHECK

Check the following:

1. Tires for improper air pressure and wear.
2. Road wheels for runout. Refer to WT-4, "ROAD WHEEL" .
3. Wheel bearing axial end play. Refer to RAX-5, "WHEEL BEARING INSPECTION" .
4. Strut operation.
5. Each of mounting points of axle housing and suspension for looseness and deformation.
6. Each of rear parallel link, front parallel link, suspension member, radius rod and strut for cracks, deformation, and other damage.
7. Vehicle height under unladen conditions (posture).

CAMBER INSPECTION

- Measure camber of both right and left wheels with a suitable alignment gauge.
- Adjust in accordance with the following procedures.

Camber : Refer to RSU-18, "SERVICE DATA AND SPECIFICATIONS (SDS)" .

- If camber is not within the specification, inspect and replace any damaged or worn rear suspension parts.

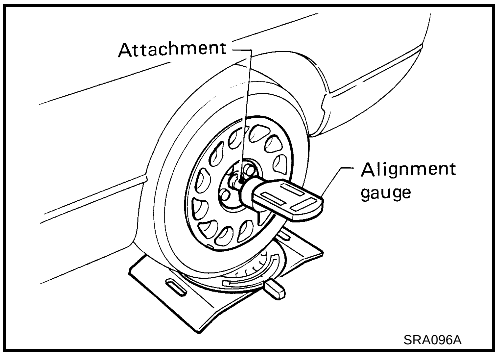

TOE-IN

Measure toe-in using following procedure. If out of the specification, inspect and replace any damaged or worn rear suspension parts.

WARNING:

- **Always perform the following procedure on a flat surface.**
- **Make sure that no person is in front of vehicle before pushing it.**

1. Bounce rear of vehicle up and down to stabilize the vehicle height (posture).
2. Push vehicle straight ahead about 5 m (16 ft).
3. Put a mark on base line of the tread (rear side) of both tires at the same height of hub center. These are measuring points.

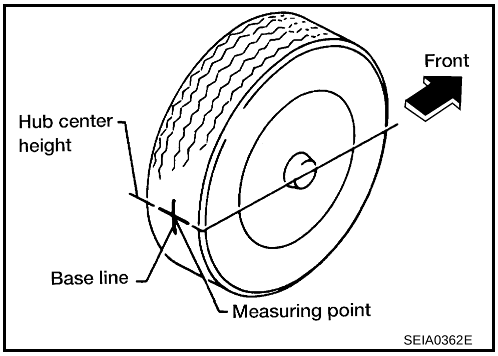

4. Measure distance “A” (rear side).
5. Push vehicle slowly ahead to rotate wheels 180° degrees (1/2 turn).

   NOTE:
   If the wheels have rotated more than 180° degrees (1/2 turn), start this procedure again from the beginning. Do not push the vehicle backward.
6. Measure distance “B” (front side).

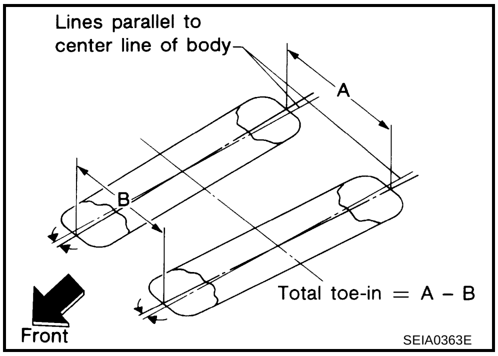

Total toe-in : Refer to RSU-18, "SERVICE DATA AND SPECIFICATIONS (SDS)" .

7. If toe-in is not within the specification, adjust by turning the adjusting bolt of rear parallel link.

   CAUTION:
   When adjusting toe-in, set the both sides to the same values.

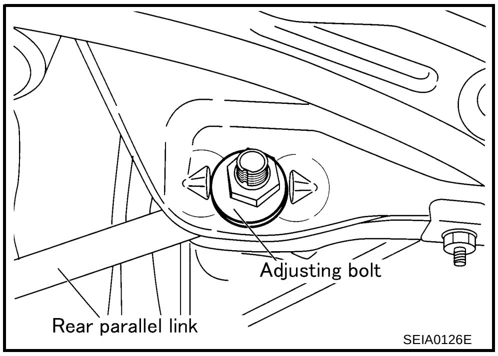

Component

AES000XG

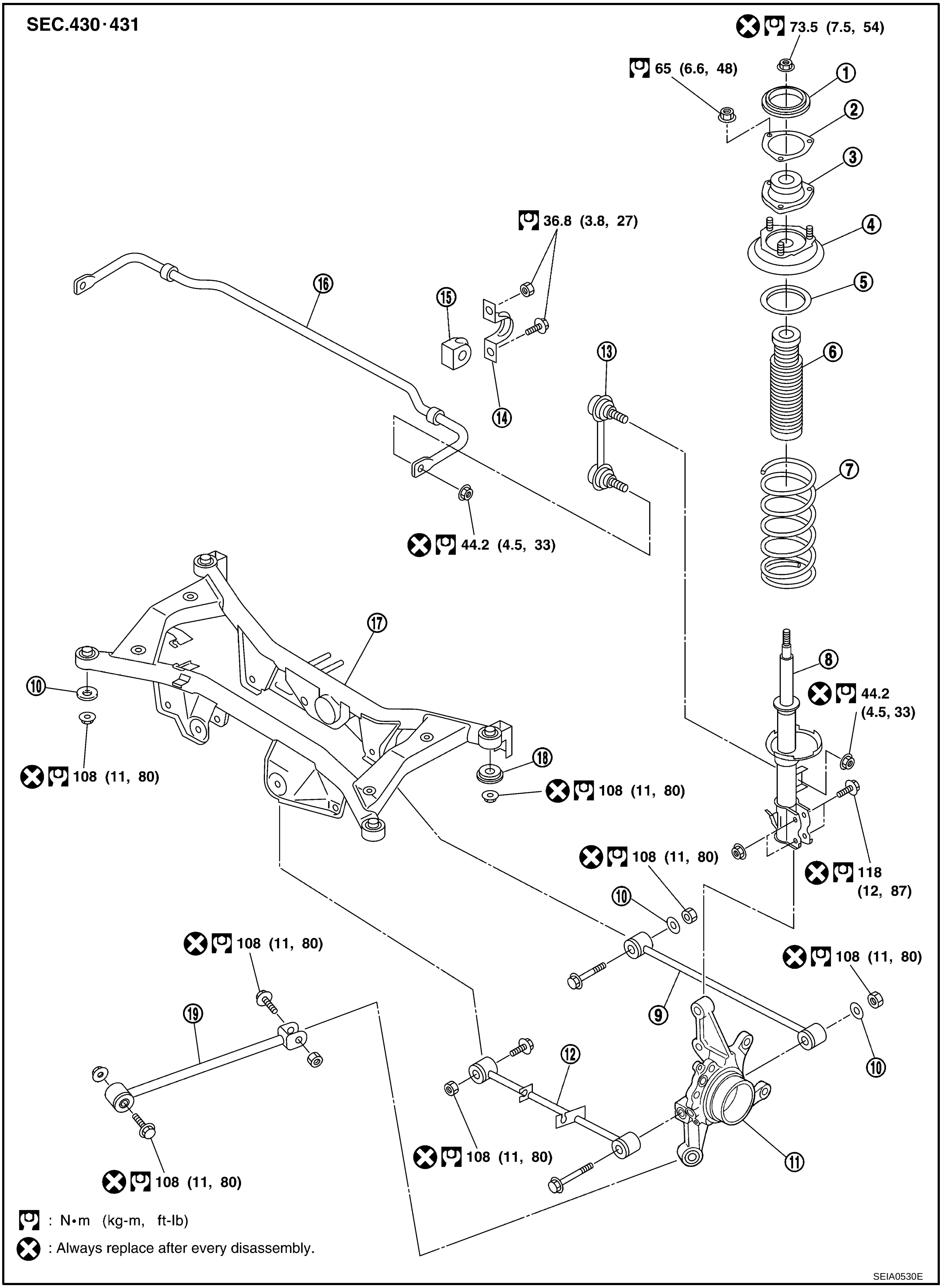

1.	Strut seal	2.	Strut spacer	3.	Mounting insulator
4.	Mounting insulator bracket	5.	Spring upper seat	6.	Bound bumper
7.	Coil spring	8.	Strut	9.	Rear parallel link
10.	Washer	11.	Axle housing	12.	Front parallel link
13.	Stabilizer connecting rod	14.	Stabilizer clamp	15.	Stabilizer bushing
16.	Stabilizer bar	17.	Rear suspension member	18.	Stopper
19.	Radius rod				

Removal and Installation

AES000XY

REMOVAL

1. Remove tires from vehicle with a power tool.
2. Remove harness of wheel sensor from rear suspension member, front parallel link and axle housing. Refer to BRC-36, "WHEEL SENSORS" .

   CAUTION:
   Do not pull on wheel sensor harness.
3. Remove torque member fixing bolts with power tool. Hang torque member in a place where it will not interfere with work. Refer to BR-31, "REAR DISC BRAKE" .

   NOTE:
   Avoid depressing brake pedal while brake caliper is removed.
4. Remove disc rotor. Refer to BR-31, "REAR DISC BRAKE" .
5. Remove lock plate and brake hose from strut assembly. Refer to PB-3, "PARKING BRAKE SYSTEM" .
6. Remove parking brake cable from axle housing. Refer to PB-4, "PARKING BRAKE CONTROL" .
7. Remove main muffler and exhaust center tube. Refer to EX-2, "EXHAUST SYSTEM" .
8. Remove rear final drive (AWD models). Refer to RFD-14, "REAR FINAL DRIVE ASSEMBLY" .
9. Remove electric controlled coupling harness connector from rear suspension member (AWD models).
10. Remove the mounting nut on the upper side of stabilizer connecting rod with a power tool. Remove stabilizer connecting rod from strut assembly.
11. Set jack under rear suspension member.

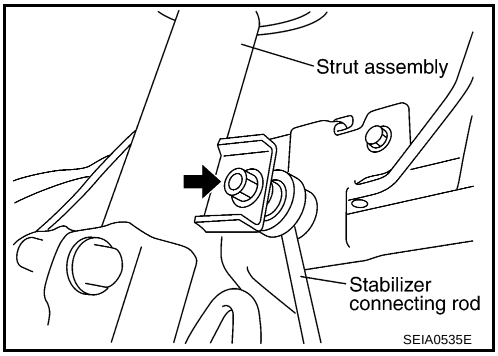

12. Remove fixing bolts and nuts on the lower side of strut assembly with a power tool. Remove axle housing from strut assembly.
13. Remove the fixing bolt and nut on the vehicle side of radius rod.
14. Remove rear suspension member mounting nuts, and then remove washers and stoppers.
15. Slowly lower jack to remove rear suspension assembly.

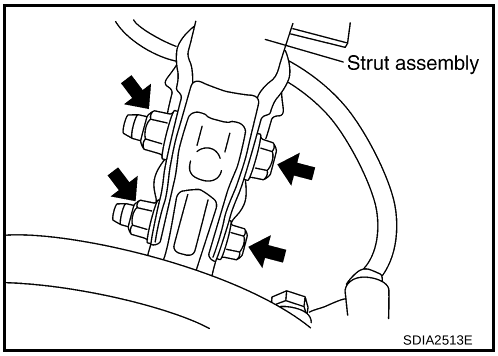

INSTALLATION

- Install in the reverse order of the removal. For tightening torque, refer to RSU-7, "Component" .

  NOTE:
  Do not reuse non-reusable parts.
- Perform the final tightening of each of parts, under unladen conditions, which were removed when removing rear suspension assembly. Check the wheel alignment. Refer to RSU-5, "Wheel Alignment Inspection" .
- Adjust neutral position of steering angle sensor after checking the wheel alignment for model with VDC. Refer to BRC-43, "Adjustment of Steering Angle Sensor Neutral Position" .
- Check wheel sensor harness for proper connection. Refer to BRC-36, "WHEEL SENSORS" .

COIL SPRING AND STRUT

PFP:55302

Removal and Installation

AES000XH

REMOVAL

1. Remove tires from vehicle with a power tool.
2. Remove torque member fixing bolts with a power tool. Hang torque member in a place where it will not interfere with work. Refer to BR-31, "REAR DISC BRAKE" .

   NOTE:
   Avoid depressing brake pedal while brake caliper is removed.
3. Remove lock plate and brake hose from strut assembly. Refer to BR-11, "BRAKE PIPING AND HOSE" .
4. Remove disc rotor. Refer to RAX-5, "Removal and Installation" .
5. Remove the mounting nut on the upper side of stabilizer connecting rod with a power tool. Remove stabilizer connecting rod from strut assembly.

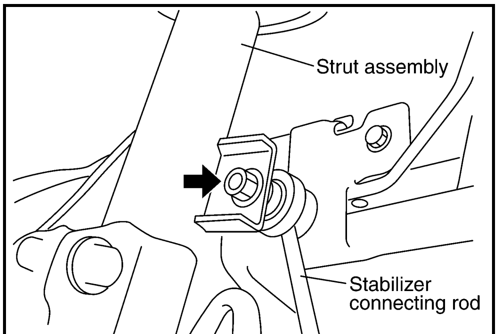

SEIA0535E

6. Remove fixing bolts and nuts on the lower side of strut assembly with a power tool. Remove axle housing from strut assembly.
7. Remove luggage side lower finisher in luggage room. Refer to EI-36, "BODY SIDE TRIM" .

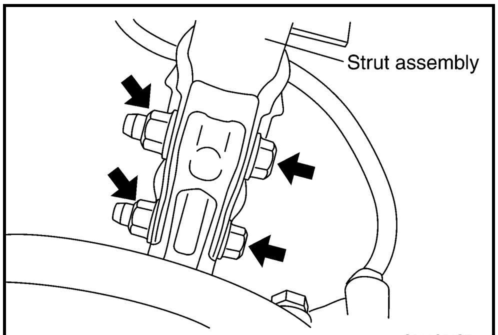

SDIA2513E

8. Remove the mounting nuts of mounting insulator bracket, and then remove strut assembly from vehicle.

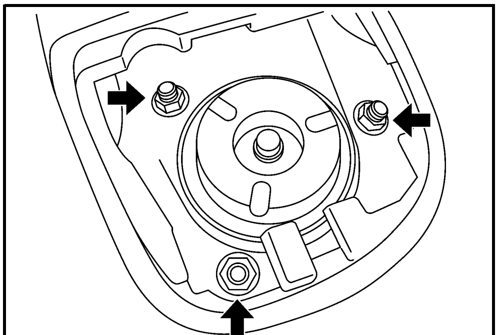
SEIA0536E

INSTALLATION

- Install in the reverse order of removal. For tightening torque, refer to RSU-7, "Component" .

  NOTE:
  Do not reuse non-reusable parts.
- Perform the final tightening of each of parts, under unladen conditions, which were removed when removing coil spring and strut. Check the wheel alignment. Refer to RSU-5, "Wheel Alignment Inspection" .
- Adjust neutral position of steering angle sensor after checking the wheel alignment for model with VDC. Refer to BRC-43, "Adjustment of Steering Angle Sensor Neutral Position" .

- Install strut spacer and mounting insulator with positioning “F” stamp for mounting insulator bracket as shown in the figure.

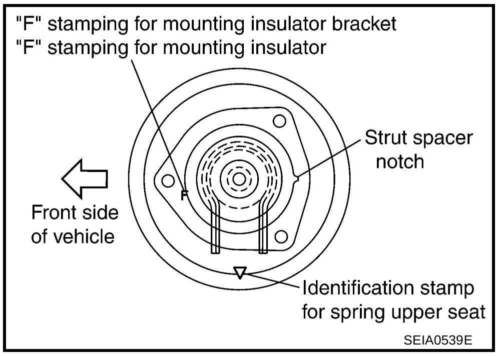

SEIA0539E

Disassembly and Assembly

AES000XI

DISASSEMBLY

CAUTION:
Do not damage strut piston rod when removing components from strut.

1. Install the strut attachment [SST] to strut and secure it in a vise.
   CAUTION:
   Wrap a shop cloth around strut to protect it from damage when installing the strut attachment [SST] to strut.

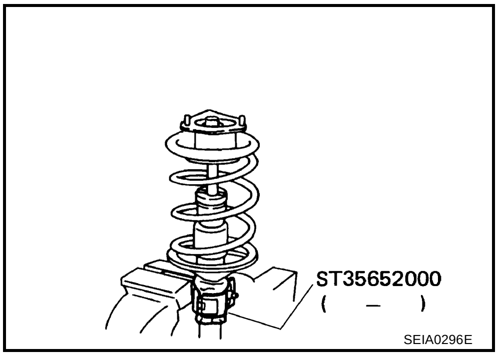

SEIA0296E

2. Compress coil spring using a spring compressor (commercial service tool) until coil spring with the compressor is free.
   CAUTION:
   Start compressing coil spring after making sure that the compressor is completely attached to coil spring.
3. Make sure that coil spring with the compressor is free between spring upper seat and lower spring seat (strut), and then remove piston rod lock nut while securing the end of piston rod so as not to rotate piston rod.
4. Remove mounting insulator bracket, spring upper seat and bound bumper from strut.

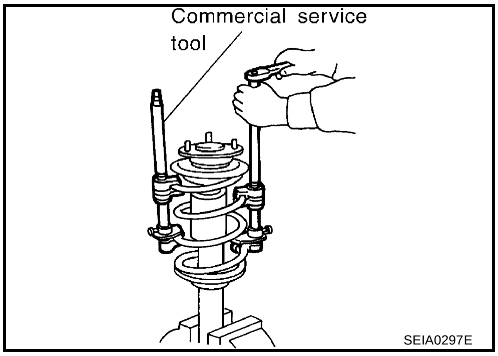

SEIA0297E

5. Remove coil spring with the compressor, and then gradually release the compressor.
   CAUTION:
   Loosen the compressor while checking installation position so that compressor is installed to the correct position.
6. Remove the strut attachment [SST] from strut.

INSPECTION AFTER DISASSEMBLY

Strut Inspection

Check the following:

- Strut for deformation, cracks, and damage. Replace if there are.
- Piston rod for damage, uneven wear, and distortion. Replace if there are.
- For oil leakage. Replace if there are.

Mounting Insulator and Rubber Parts Inspection

Check mounting insulator for cracks and rubber parts for wear. Replace if there are.

Coil Spring Inspection

Check coil spring for cracks, wear, and damage. Replace if there are.

ASSEMBLY

CAUTION:

Do not damage strut piston rod when installing components to strut.

1. Install the strut attachment [SST: ST35652000 (–)] to strut and secure it in a vise.

   CAUTION:

   Wrap a shop cloth around strut to protect it from damage when installing the strut attachment [SST] to strut.

2. Compress coil spring using a spring compressor (commercial service tool), and install it onto strut.

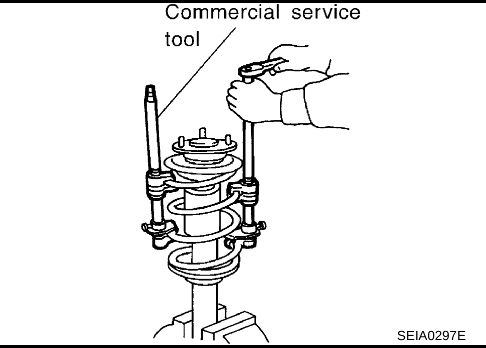

SEIA0297E

   CAUTION:

   - **Face the large diameter side of coil spring downward. Align the lower end to lower spring seat as shown in the figure.**
   - **Start compressing coil spring after making sure that the compressor is completely attached to coil spring.**

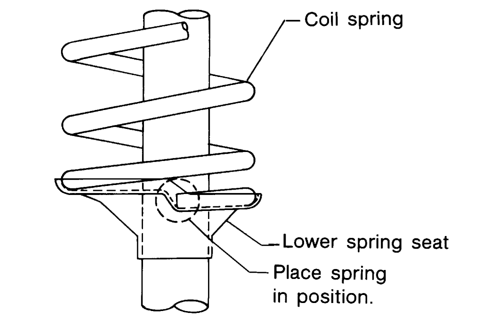

SFA149

3. Apply soapy water to bound bumper. Insert bound bumper into spring upper seat, and then install it to strut.
4. Install mounting insulator bracket to strut.
5. Secure end of piston rod so as not to rotate piston rod. Tighten piston rod lock nut to the specified torque.
6. Gradually release the compressor, and remove it from coil spring.

   CAUTION:

   Loosen the compressor while checking installation position so that coil spring is installed to the correct position.

7. Remove the strut attachment [SST] from strut.

FRONT PARALLEL LINK

PFP:55120

Removal and Installation

AES000XJ

REMOVAL

1. Remove tires from vehicle with a power tool.
2. Remove harness of wheel sensor from front parallel link. Refer to BRC-36, "WHEEL SENSORS" .

   CAUTION:

   Do not pull on wheel sensor harness.
3. Remove the fixing bolt and nut on the rear suspension member side of front parallel link.
4. Remove the fixing bolt, nut and washer on the axle housing side of front parallel link.
5. Remove front parallel link from vehicle.

INSPECTION AFTER REMOVAL

Check front parallel link and bushing for deformation, cracks, and other damage. Replace front parallel link if there are.

INSTALLATION

- Install in the reverse order of the removal. For tightening torque, refer to RSU-7, "Component" .

  NOTE:

  Do not reuse non-reusable parts.
- Perform the final tightening of each of parts, under unladen conditions, which were removed when removing front parallel link. Check the wheel alignment. Refer to RSU-5, "Wheel Alignment Inspection" .
- Adjust neutral position of steering angle sensor after checking the wheel alignment for model with VDC. Refer to BRC-43, "Adjustment of Steering Angle Sensor Neutral Position" .
- Check wheel sensor harness for proper connection. Refer to BRC-36, "WHEEL SENSORS" .

REAR PARALLEL LINK

PFP:55121

Removal and Installation

AES000XK

REMOVAL

1. Remove tires from vehicle with a power tool.
2. Remove the fixing bolt, nut and washer on the rear suspension member side of rear parallel link.
3. Remove the fixing bolt, nut and washer on the axle housing side of rear parallel link.
4. Remove rear parallel link from vehicle.

INSPECTION AFTER REMOVAL

Check rear parallel link and bushing for deformation, cracks, and other damage. Replace rear parallel link if there are.

INSTALLATION

- Install in the reverse order of the removal. For tightening torque, refer to RSU-7, "Component" .

  NOTE:
  Do not reuse non-reusable parts.
- Perform the final tightening of each of parts, under unladen conditions, which were removed when removing rear parallel link. Check the wheel alignment. Refer to RSU-5, "Wheel Alignment Inspection" .
- Adjust neutral position of steering angle sensor after checking the wheel alignment for model with VDC. Refer to BRC-43, "Adjustment of Steering Angle Sensor Neutral Position" .

RADIUS ROD

PFP:55110

Removal and Installation

AES000XL

REMOVAL

1. Remove tires from vehicle with a power tool.
2. Remove the fixing bolt and nut on the vehicle side of radius rod.
3. Remove the fixing bolt and nut on the axle housing side of radius rod.
4. Remove radius rod from vehicle.

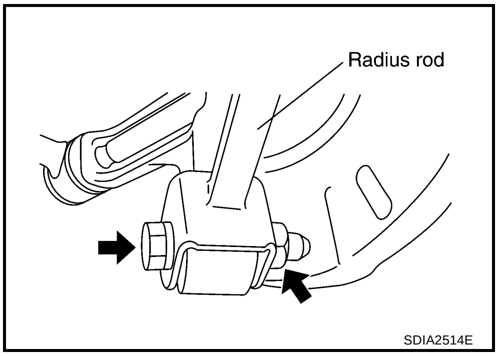

INSPECTION AFTER REMOVAL

Check radius rod and bushing for deformation, cracks, and other damage. Replace radius rod if there are.

INSTALLATION

- Install in the reverse order of the removal. For tightening torque, refer to RSU-7, "Component" .

  NOTE:
  Do not reuse non-reusable parts.
- Perform the final tightening of each of parts, under unladen conditions, which were removed when removing radius rod. Check the wheel alignment. Refer to RSU-5, "Wheel Alignment Inspection" .
- Adjust neutral position of steering angle sensor after checking the wheel alignment for model with VDC. Refer to BRC-43, "Adjustment of Steering Angle Sensor Neutral Position" .

A B C D RSU F G H I J K L M

STABILIZER BAR

PFP:54611

Removal and Installation

AES000XM

REMOVAL

1. Remove tires from vehicle with a power tool.
2. Remove the mounting nut on the lower side of stabilizer connecting rod with power tool. Remove stabilizer connecting rod from stabilizer bar.

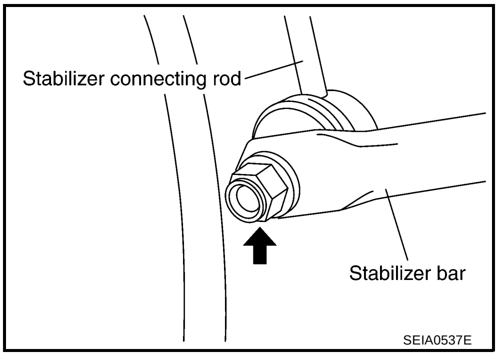

3. If necessary remove the mounting nut on the upper side of stabilizer connecting rod with a power tool. Remove stabilizer connecting rod from strut assembly.
4. Remove the mounting bolt and nut, and then remove stabilizer clamp and stabilizer bushing with a power tool.
5. Remove stabilizer bar from vehicle.

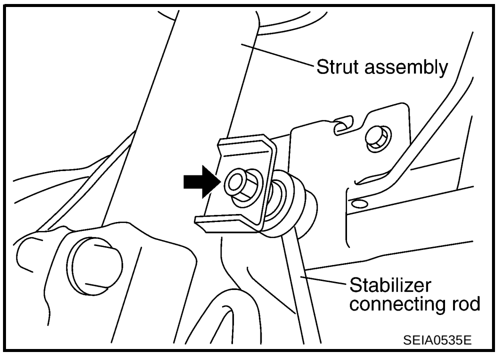

INSPECTION AFTER REMOVAL

Check stabilizer bar, stabilizer bushing, stabilizer clamp and stabilizer connecting rod for deformation, cracks, and damage. Replace if there are.

INSTALLATION

- Install in the reverse order of the removal. For tightening torque, refer to RSU-7, "Component" .

  NOTE:
  Do not reuse non-reusable parts.

REAR SUSPENSION MEMBER

PFP:55501

Removal and Installation

AES000XN

REMOVAL

1. Remove tires from vehicle with a power tool.
2. Remove harness of wheel sensor from rear suspension member. Refer to BRC-36, "WHEEL SENSORS" .

   CAUTION:
   Do not pull on wheel sensor harness.
3. Remove torque member fixing bolts with a power tool. Hang torque member in a place where it will not interfere with work. Refer to BR-31, "REAR DISC BRAKE" .

   NOTE:
   Avoid depressing brake pedal while brake caliper is removed.
4. Remove disc rotor. Refer to BR-31, "REAR DISC BRAKE" .
5. Remove lock plate and brake hose from strut assembly. Refer to BR-11, "BRAKE PIPING AND HOSE" .
6. Remove main muffler and exhaust center tube. Refer to EX-2, "EXHAUST SYSTEM" .
7. Remove rear final drive (AWD models). Refer to RFD-14, "REAR FINAL DRIVE ASSEMBLY" .
8. Remove electric controlled coupling harness connector from rear suspension member (AWD models).
9. Remove stabilizer bar. Refer to RSU-16, "STABILIZER BAR" .
10. Set a jack under rear suspension member
11. Remove rear suspension member side mounting bolts, nuts and washers of parallel link (front and rear).
12. Remove parallel link (front and rear) from rear suspension member.
13. Remove rear suspension member mounting nuts, and then remove washers and stoppers.
14. Slowly lower jack to remove rear suspension member from vehicle.

INSPECTION AFTER REMOVAL

Check rear suspension member for deformation, cracks, or other damage. Replace if there are.

INSTALLATION

- Install in the reverse order of the removal. For tightening torque, refer to RSU-7, "Component" .

  NOTE:
  Do not reuse non-reusable parts.
- Perform the final tightening of each of parts, under unladen conditions, which were removed when removing rear suspension member. Check the wheel alignment. Refer to RSU-5, "Wheel Alignment Inspection" .
- Adjust the neutral position of steering angle sensor after checking the wheel alignment for model with VDC. Refer to BRC-43, "Adjustment of Steering Angle Sensor Neutral Position" .
- Check wheel sensor harness for proper connection. Refer to BRC-36, "WHEEL SENSORS" .

SERVICE DATA AND SPECIFICATIONS (SDS)

PFP:00030

Wheel Alignment (Unladen)

AES000XO

Camber Degree minute (Decimal degree)		Minimum	– 1°25′ (– 1.42°)
		Nominal	– 0°40′ (– 0.67°)
		Maximum	0°05′ (0.08°)
Total Toe-in	Distance (A – B)	Minimum	0 mm (0 in)
		Nominal	1 mm (0.04 in)
		Maximum	2 mm (0.08 in)
	Angle (left plus right) Degree minute (degree)	Nominal	2′ (0.03°)

Wheelarch Height (Unladen*)

AES000XP

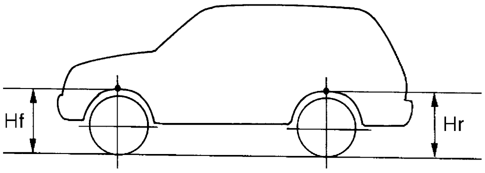

SFA746B

Applied model	2WD	AWD
Front (Hf)	774 mm (30.47 in)	773 mm (30.43 in)
Rear (Hr)	786 mm (30.94 in)	785 mm (30.91 in)

*: Fuel, engine coolant and engine oil full. Spare tire, jack, hand tools and mats are in designated positions.